User's Guide

SWRU359E–September 2013–Revised September 2015

WL1835MODCOM8B WLAN MIMO and Bluetooth® Module EVM

This user's guide describes how to use the TI WL1835MODCOM8B board to evaluate the performance of the TI WL18MODGB module.

Contents

1 Introduction 3
1.1 Features 4
1.2 Applications 5
1.3 TI Module Key Benefits 5
2 Board Pin Assignment 6
2.1 Pin Descriptions 7
3 Electrical Characteristics 9
4 Approved Antenna Types and Maximum Gain Values 9
5 On-Board Antenna Configuration 10
5.1 VSWR 10
5.2 Efficiency 11
5.3 Radio Pattern 11
5.4 ANT1 12
5.5 ANT2 13
6 Circuit Design 15
6.1 Schematic 15
6.2 Bill of Materials (BOM) 16
7 Layout Guidelines 17
7.1 Board Layout 17

List of Figures

1 WL1835MODCOM8B Top View 3
2 Board Top View 6
3 Board Bottom View 6
4 Antenna VSWR 10
5 Antenna Efficiency 11
6 Radio Pattern 11
7 ANT1 Polarization 12
8 ANT1 Polarization 12
9 ANT1 Polarization 13
10 ANT2 Polarization 13
11 ANT2 Polarization 14
12 ANT2 Polarization 14
13 Schematic 15
14 Layer 1 17

WiLink8 is a trademark of Texas Instruments.
Bluetooth is a registered trademark of Bluetooth SIG, Inc.
Android is a trademark of Google Inc.
Linux is a registered trademark of Linux Foundation.
Wi-Fi is a registered trademark of Wi-Fi Alliance.

Copyright © 2013–2015, Texas Instruments Incorporated

15 Layer 2 17
16 Layer 3 18
17 Layer 4 18
18 Module Layout Guidelines (Top Layer) 19
19 Module Layout Guidelines (Bottom Layer) 19
20 Trace Design for the PCB Layout 20
21 Layer 1 Combined With Layer 2 20
22 Top Layer – Antenna and RF Trace Routing Layout Guidelines 21
23 Bottom Layer – Antenna and RF Trace Routing Layout Guidelines 21
24 MIMO Antenna Spacing 22

List of Tables

1 Approved Antenna Types and Maximum Gain Values 9
2 BOM 16
3 Module Layout Guidelines 18
4 Antenna and RF Trace Routing Layout Guidelines 20

Warning

The WL1835MODCOM8B board is tested to comply with ETSI/R&TTE over temperatures from –20°C to 85°C.

This board should not be modified to operate in other frequency bands other than what they are designed for.

FCC Licensing Requirements for the Wi-Fi and Bluetooth Radio Module of the EVM:

For evaluation only; not FCC approved for resale. This kit is designed to allow:

1. Product developers to evaluate electronic components, circuitry, or software associated with the kit to determine whether to incorporate such items in a finished product
2. Software developers to write software applications for use with the end product. This kit is not a finished product and when assembled may not be resold or otherwise marketed unless all required FCC equipment authorizations are first obtained. Operation is subject to the condition that this product not cause harmful interference to licensed radio stations and that this product accept harmful interference. Unless the assembled kit is designed to operate under part 15, part 18, or part 95 of this chapter, the operator of the kit must operate under the authority of an FCC license holder or must secure an experimental authorization under part 5 of this chapter.

Per TI's Regulatory Compliance Information located in the WL1835ModCOMB8B User's Guide's "Evaluation Board/Kit/Module (EVM) Additional Terms," this EVM cannot be used for production purposes and is explicitly restricted from end-product introduction.

Use of this EVM requires the developer to provide a minimum distance of at least 20 cm from the antenna to all persons in order to minimize risk of potential radiation hazards.

CAUTION

Do not leave the EVM powered when unattended.

Copyright © 2013–2015, Texas Instruments Incorporated

1 Introduction

The WL1835MODCOM8B device is a Wi-Fi® MIMO, *Bluetooth*, and *Bluetooth* Low Energy (BLE) module board with the TI WL18MODGB module. WL18MODGB is built-in TI WL1835 IEEE 802.11 b/g/n and *Bluetooth* 4.0 solutions to provide the best Wi-Fi and *Bluetooth* coexistence interoperability and power-saving technologies from TI.

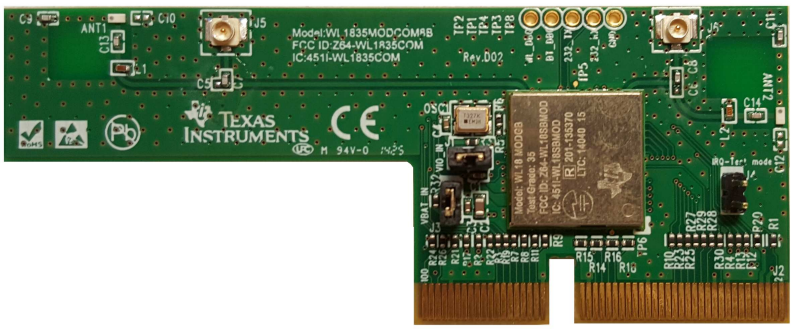

Figure 1. WL1835MODCOM8B Top View

<u>FCC/IC Regulatory Compliance</u>
FCC Part 15 Class A Compliant
IC ICES-003 Class A Compliant

Copyright © 2013–2015, Texas Instruments Incorporated

(continued)

FCC ID: Z64-WL1835COM

This device complies with part 15 of the FCC Rules. Operation is subject to the following two conditions: (1) This device may not cause harmful interference, and (2) this device must accept any interference received, including interference that may cause undesired operation.

IC ID: 451I-WL1835COM

This device complies with Industry Canada licence-exempt RSS standard(s). Operation is subject to the following two conditions: (1) this device may not cause interference, and (2) this device must accept any interference, including that may cause undesired operation of the device.

1.1 Features

- WLAN, *Bluetooth*, BLE on a module board
- 100-pin board card
- Dimension 76.0 mm(L) x 31.0 mm(W)
- WLAN 2.4 GHz SISO (20- and 40-MHz channels), 2.4-GHz MIMO (20-MHz channels)
- Support for BLE dual mode
- Seamless integration with TI Sitara and other application processors
- Design for TI AM335X general-purpose EVM
- WLAN and *Bluetooth*, BLE cores are software and hardware compatible with prior WL127x, WL128x and CC256x offerings, for smooth migration to device.
- Shared HCI transport for *Bluetooth* and BLE over UART and SDIO for WLAN.
- Wi-Fi / *Bluetooth* single antenna co-existence
- Built-in chip antenna
- Optional U.FL RF connector for external 2.4-GHz band antenna
- Direct connection to battery using external switching mode power supply supporting 4.8-V to 2.9-V operation
- VIO in the 1.8-V domain

Copyright © 2013–2015, Texas Instruments Incorporated

1.2 Applications

- Internet of Things Multimedia
- Home Electronics
- Home Appliances and White Goods
- Industrial and Home Automation
- Smart Gateway and Metering
- Video Conferencing
- Video Camera and Security

1.3 TI Module Key Benefits

- Reduces Design Overhead: Single WiLink8™ Module Scales Across Wi-Fi and *Bluetooth*.
- WLAN High Throughput: 80 Mbps (TCP), 100 Mbps (UDP)
- *Bluetooth* 4.0 + BLE (Smart Ready)
- Wi-Fi-*Bluetooth* Single Antenna Coexistence
- Low Power (30–50% Less than Previous Generation)
- Available as Easy-to-Use FCC, ETSI, and Telec Certified Module
- Lower Manufacturing Costs, Saving Board Space and Minimizing RF Expertise
- AM335x Linux® and Android™ Reference Platform Accelerates Customer Development and Time to Market

Copyright © 2013–2015, Texas Instruments Incorporated

2 Board Pin Assignment

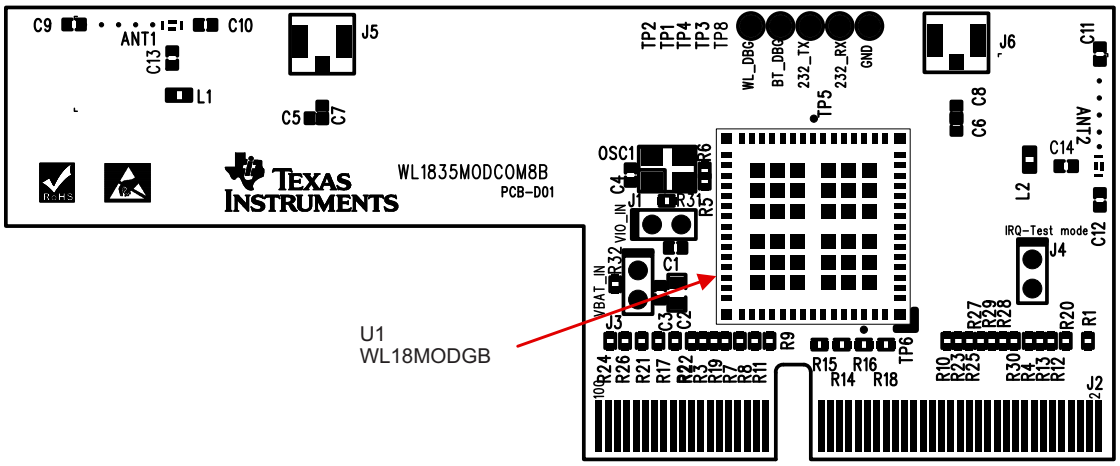

Figure 2. Board Top View

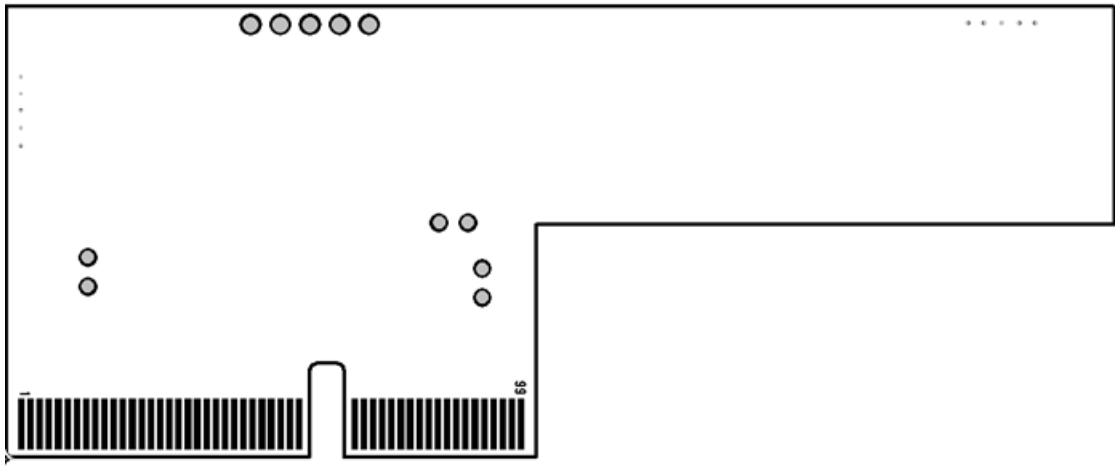

Figure 3. Board Bottom View

Copyright © 2013–2015, Texas Instruments Incorporated

2.1 Pin Descriptions

No.	Name	Type	Description
1	SLOW_CLK	I	Slow clock input
2	GND	G	Ground
3	GND	G	Ground
4	WL_EN	I	WLAN Enable
5	VBAT	P	Power supply input
6	GND	G	Ground
7	VBAT	P	Power supply input
8	VIO	P	Power supply input for I/O pin
9	GND	G	Ground
10	N.C.		No connection
11	WL_RS232_TX	O	WLAN tool RS232 output
12	N.C.		No connection
13	WL_RS232_RX	I	WLAN tool RS232 input
14	N.C.		No connection
15	WL_UART_DBG	O	WLAN Logger output
16	N.C.		No connection
17	N.C.		No connection
18	GND	G	Ground
19	GND	G	Ground
20	SDIO_CLK	I	WLAN SDIO clock
21	N.C.		No connection
22	GND	G	Ground
23	N.C.		No connection
24	SDIO_CMD	I/O	WLAN SDIO command
25	N.C.		No connection
26	SDIO_D0	I/O	WLAN SDIO data bit 0
27	N.C.		No connection
28	SDIO_D1	I/O	WLAN SDIO data bit 1
29	N.C.		No connection
30	SDIO_D2	I/O	WLAN SDIO data bit 2
31	N.C.		No connection
32	SDIO_D3	I/O	WLAN SDIO data bit 3
33	N.C.		No connection
34	WLAN_IRQ	O	WLAN SDIO interrupt out
35	N.C.		No connection
36	N.C.		No connection
37	GND	G	Ground
38	N.C.		No connection
39	N.C.		No connection
40	N.C.		No connection
41	N.C.		No connection
42	GND	G	Ground
43	N.C.		No connection
44	N.C.		No connection
45	N.C.		No connection
46	N.C.		No connection
47	GND	G	Ground

Copyright © 2013–2015, Texas Instruments Incorporated

No.	Name	Type	Description
48	N.C.		No connection
49	N.C.		No connection
50	N.C.		No connection
51	N.C.		No connection
52	PCM_IF_CLK	I/O	*Bluetooth* PCM clock input or output
53	N.C.		No connection
54	PCM_IF_FSYNC	I/O	*Bluetooth* PCM frame sync input or output
55	N.C.		No connection
56	PCM_IF_DIN	I	*Bluetooth* PCM data input
57	N.C.		No connection
58	PCM_IF_DOUT	O	*Bluetooth* PCM data output
59	N.C.		No connection
60	GND	G	Ground
61	N.C.		No connection
62	N.C.		No connection
63	GND	G	Ground
64	GND	G	Ground
65	N.C.		No connection
66	BT_UART_IF_TX	O	*Bluetooth* HCI UART transmit output
67	N.C.		No connection
68	BT_UART_IF_RX	I	*Bluetooth* HCI UART receive input
69	N.C.		No connection
70	BT_UART_IF_CTS	I	*Bluetooth* HCI UART Clear to Send input
71	N.C.		No connection
72	BT_UART_IF_RTS	O	*Bluetooth* HCI UART Request to Send output
73	N.C.		No connection
74	BT_FUNC1	O	BT_HOST_WAKE_UP Signal to wake up the host from *Bluetooth*
75	N.C.		No connection
76	BT_UART_DEBUG	O	*Bluetooth* Logger UART output
77	GND	G	Ground
78	GPIO9	I/O	General-purpose I/O
79	N.C.		No connection
80	N.C.		No connection
81	N.C.		No connection
82	N.C.		No connection
83	GND	G	Ground
84	N.C.		No connection
85	N.C.		No connection
86	N.C.		No connection
87	GND	G	Ground
88	N.C.		No connection
89	BT_EN	I	*Bluetooth* Enable
90	N.C.		No connection
91	N.C.		No connection
92	GND	G	Ground
93	BT_FUNC2	I	BT_WAKE_UP *Bluetooth* wakeup from host
94	N.C.		No connection
95	GND	G	Ground
96	GPIO11	I/O	General-purpose I/O

Copyright © 2013–2015, Texas Instruments Incorporated

No.	Name	Type	Description
97	GND	G	Ground
98	GPIO12	I/O	General-purpose I/O
99	N.C.		General-purpose I/O
100	GPIO10	I/O	General-purpose I/O

3 Electrical Characteristics

Refer to the detailed data in the WL18MODGB data sheet (SWRS152) for electrical characteristics.

4 Approved Antenna Types and Maximum Gain Values

This device is intended only for OEM integrators under the following conditions:

- Install the antenna so that 20 cm is maintained between the antenna and user.
- Do not co-locate the transmitter module with any other transmitter or antenna.
- Operate the radio transmitter using only an antenna of a type and maximum (or lesser) gain approved by TI. Table 1 lists the antennas approved by TI for use with the radio transmitter along with maximum allowable gain values. Antenna types not included in the list or having a gain greater than the maximum indicated are strictly prohibited for use with this transmitter

Table 1. Approved Antenna Types and Maximum Gain Values

Antenna Type	Brand	2.4–2.5 GHz	Unit
PCB	Ethertronics	–0.600	dBi
Dipole	LSR	2.00	
PCB	Laird	2.00	
Chip	Pulse	3.20	
PIFA	LSR	2.00	
Chip	TDK	2.4	

NOTE: If these conditions cannot be met (for example, with certain laptop configurations or co-location with another transmitter), the FCC/IC authorization will not be considered valid and the FCC ID/IC ID cannot be used on the final product. In these circumstances, the OEM integrator is responsible for reevaluating the end product (including the transmitter) and obtaining a separate FCC/IC authorization.

Copyright © 2013–2015, Texas Instruments Incorporated

5 On-Board Antenna Configuration

5.1 VSWR

Figure 4 shows the antenna VSWR.

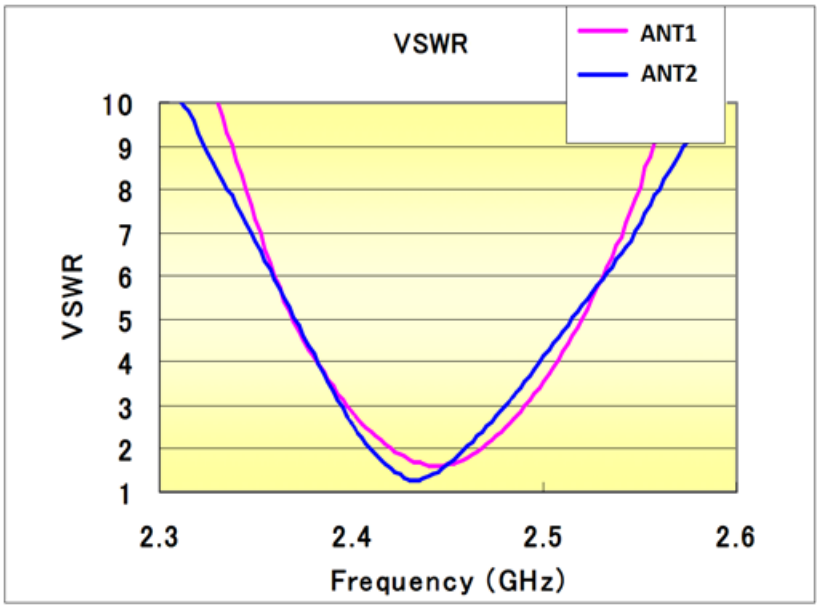

Figure 4. Antenna VSWR

Copyright © 2013–2015, Texas Instruments Incorporated

5.2 Efficiency

Figure 5 shows the antenna efficiency.

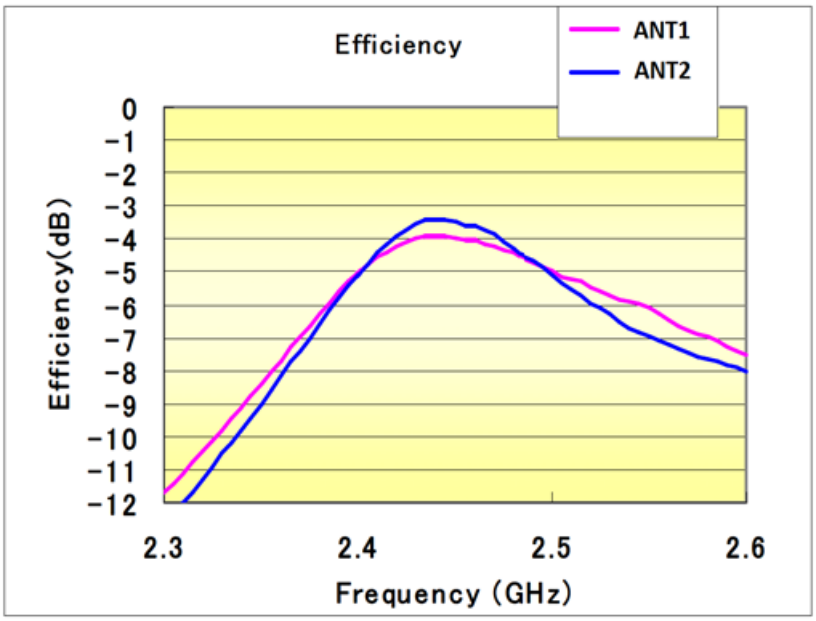

Figure 5. Antenna Efficiency

5.3 Radio Pattern

Figure 6 shows the radio pattern of the WL1835MODCOM8B device.

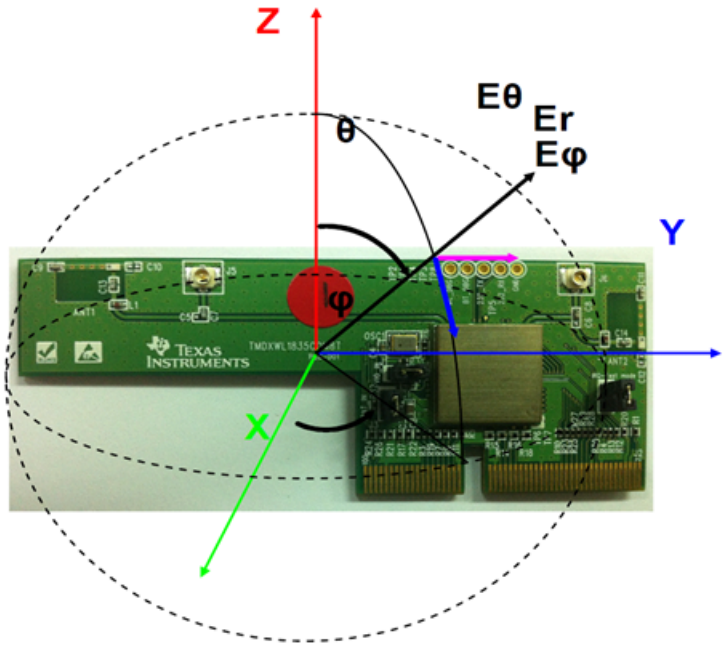

Figure 6. Radio Pattern

Copyright © 2013–2015, Texas Instruments Incorporated

5.4 ANT1

Figure 7 shows the ANT1 polarization of the WL1835MODCOM8B device.

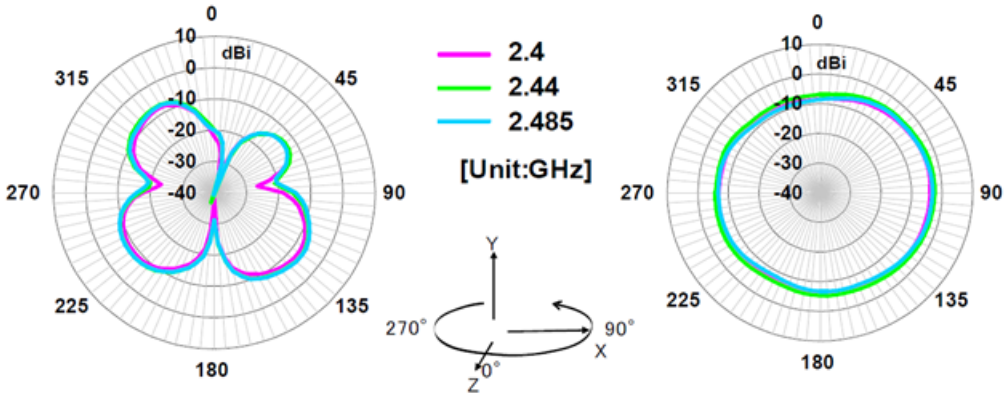

Horizontal Polarization

Frequency[GHz]	2.4	2.44	2.485
Average[dBi]	-11.96	-10.83	-10.88
Maximum[dBi]	-7.52	-6.36	-6.12
Minimum[dBi]	-37.91	-43.28	-40.60

Vertical Polarization

Frequency[GHz]	2.4	2.44	2.485
Average[dBi]	-6.03	-4.86	-5.99
Maximum[dBi]	-3.69	-2.42	-3.18
Minimum[dBi]	-8.53	-7.22	-9.02

Figure 7. ANT1 Polarization

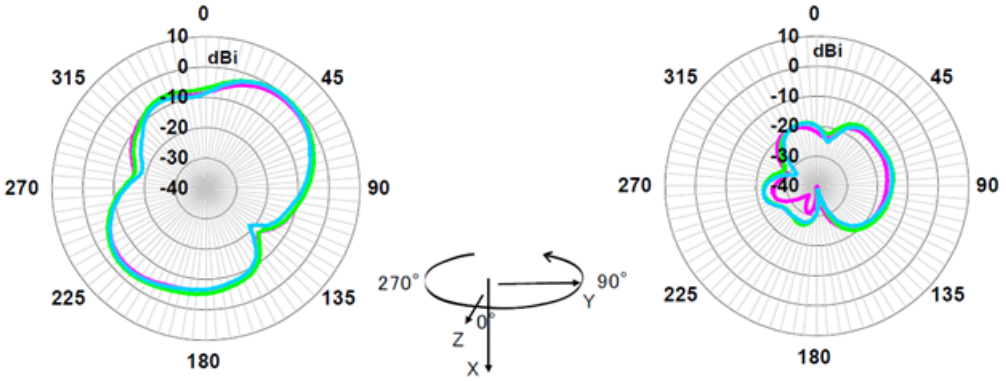

Horizontal Polarization

Frequency[GHz]	2.4	2.44	2.485
Average[dBi]	-6.27	-5.33	-6.13
Maximum[dBi]	-1.37	-0.36	-0.64
Minimum[dBi]	-17.69	-17.50	-21.28

Vertical Polarization

Frequency[GHz]	2.4	2.44	2.485
Average[dBi]	-20.77	-19.31	-19.97
Maximum[dBi]	-16.30	-14.53	-14.87
Minimum[dBi]	-39.62	-38.39	-38.65

Figure 8. ANT1 Polarization

Copyright © 2013–2015, Texas Instruments Incorporated

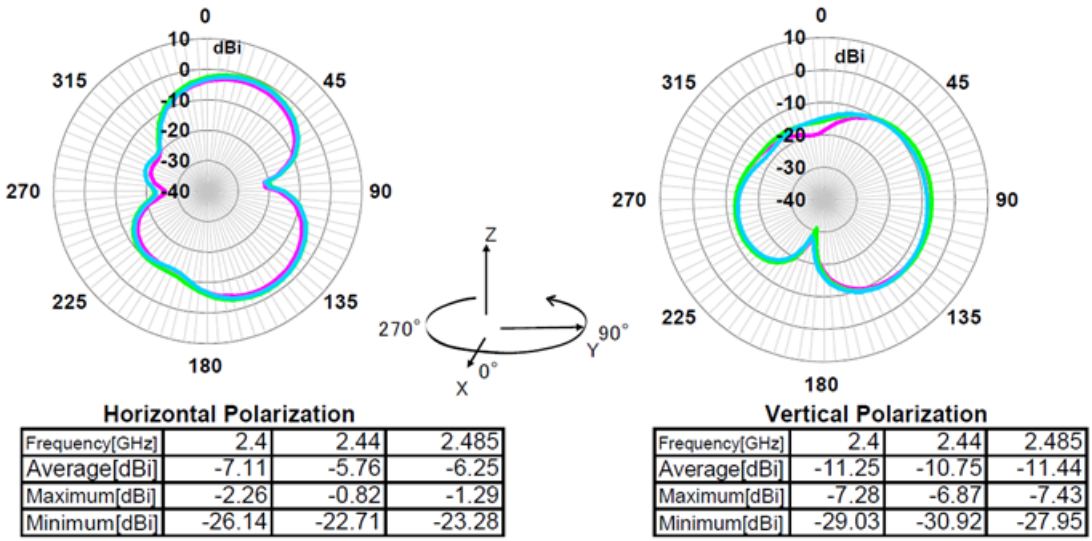

Frequency[GHz]	2.4	2.44	2.485
Average[dBi]	-7.11	-5.76	-6.25
Maximum[dBi]	-2.26	-0.82	-1.29
Minimum[dBi]	-26.14	-22.71	-23.28

Frequency[GHz]	2.4	2.44	2.485
Average[dBi]	-11.25	-10.75	-11.44
Maximum[dBi]	-7.28	-6.87	-7.43
Minimum[dBi]	-29.03	-30.92	-27.95

Figure 9. ANT1 Polarization

5.5 ANT2

Figure 10 shows the ANT2 polarization of the WL1835MODCOM8B device.

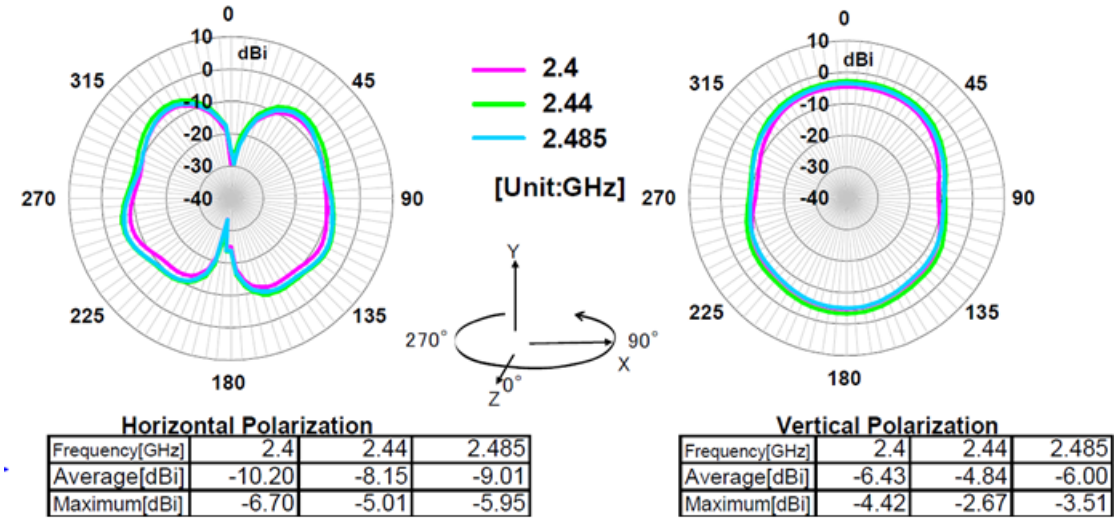

Frequency[GHz]	2.4	2.44	2.485
Average[dBi]	-10.20	-8.15	-9.01
Maximum[dBi]	-6.70	-5.01	-5.95

Frequency[GHz]	2.4	2.44	2.485
Average[dBi]	-6.43	-4.84	-6.00
Maximum[dBi]	-4.42	-2.67	-3.51

Figure 10. ANT2 Polarization

Copyright © 2013–2015, Texas Instruments Incorporated

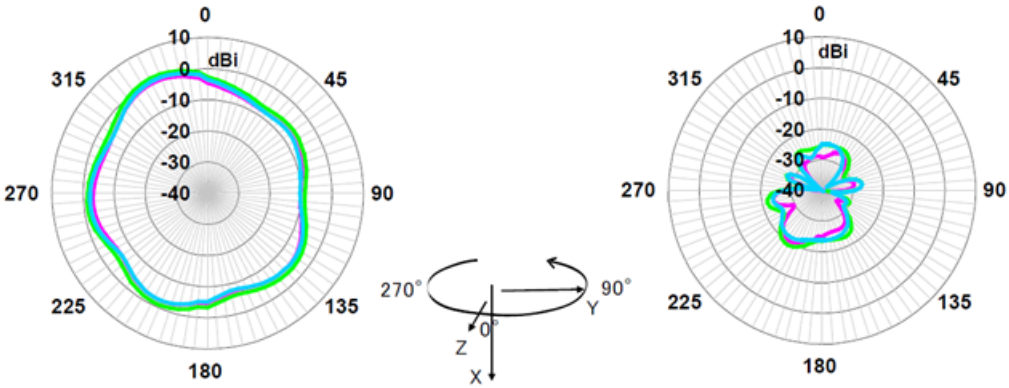

Horizontal Polarization

Frequency[GHz]	2.4	2.44	2.485
Average[dBi]	-4.62	-3.07	-4.33
Maximum[dBi]	-0.44	1.22	0.13
Minimum[dBi]	-10.03	-8.88	-10.37

Vertical Polarization

Frequency[GHz]	2.4	2.44	2.485
Average[dBi]	-26.83	-24.88	-26.19
Maximum[dBi]	-20.29	-19.04	-21.59
Minimum[dBi]	-44.93	-40.26	-40.51

Figure 11. ANT2 Polarization

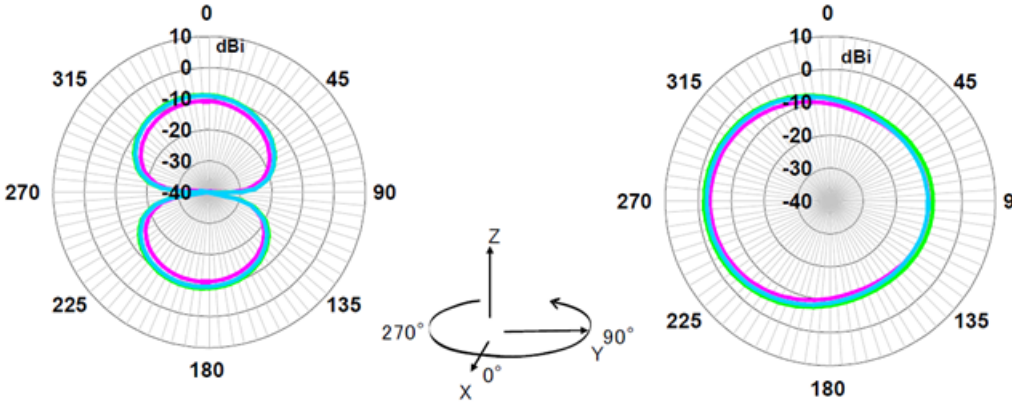

Horizontal Polarization

Frequency[GHz]	2.4	2.44	2.485
Average[dBi]	-13.99	-11.83	-12.31
Maximum[dBi]	-10.61	-8.45	-8.86
Minimum[dBi]	-46.82	-39.15	-42.85

Vertical Polarization

Frequency[GHz]	2.4	2.44	2.485
Average[dBi]	-7.55	-5.77	-6.58
Maximum[dBi]	-3.58	-1.78	-2.60
Minimum[dBi]	-11.89	-10.50	-11.43

Figure 12. ANT2 Polarization

Copyright © 2013–2015, Texas Instruments Incorporated

6 Circuit Design

6.1 Schematic

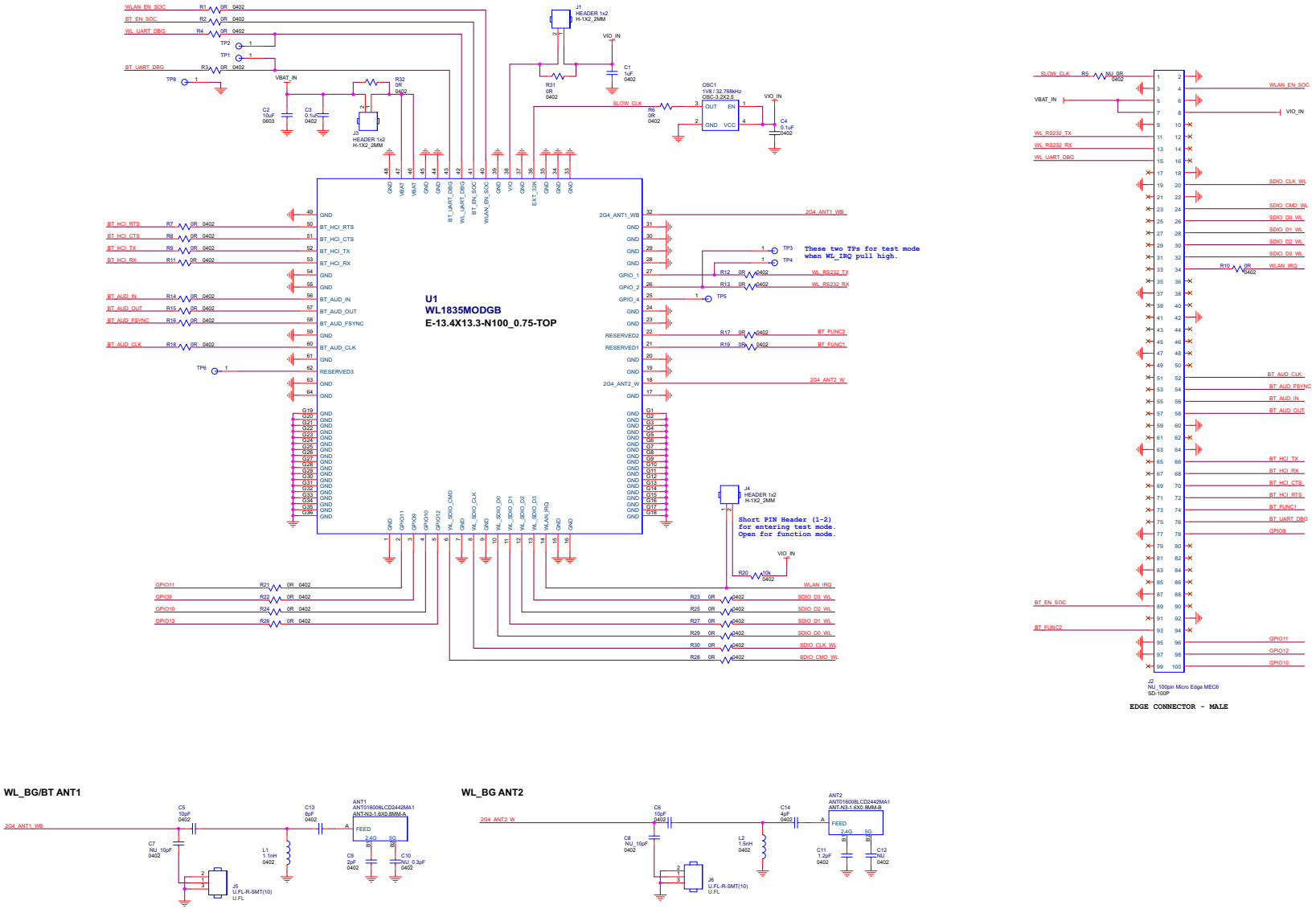

Figure 13. Schematic

Copyright © 2013–2015, Texas Instruments Incorporated

6.2 Bill of Materials (BOM)

Table 2 lists the bill of materials.

Table 2. BOM

1	TI WL1835 Wi-Fi/*Bluetooth* Module	WL18MODGB	U1
2	XOSC 3225 / 32.768 kHz / 1.8 V / ±50 ppm	7XZ3200005	OSC1
3	ANT / Chip / 2.4 GHz, 5 GHz / Peak Gain >5 dBi	ANT016008LCD2442MA1	ANT1, ANT2
4	CON Male 1x2 / Pitch	P301-SGP-040/028-02	J1, J3, J4
5	DC JUMPER / PITCH 2.0 mm	CMJ-20BB	J1, J3
6	Mini RF Header Receptacle	U.FL-R-SMT-1(10)	J5, J6
7	IND 0402 / 1.1 nH / ±0.05 nH / SMD	LQP15MN1N1W02	L1
8	IND 0402 / 1.5 nH / ±0.05 nH / SMD	LQP15MN1N5W02	L2
9	CAP 0402 / 1.2 pF / 50 V / C0G / ±0.1 pF	GJM1555C1H1R2BB01	C11
10	CAP 0402 / 2.2 pF / 50 V / C0G / ±0.1 pF	GJM1555C1H2R2BB01	C9
11	CAP 0402 / 4 pF / 50 V / C0G / ±0.1 pF	GJM1555C1H4R0BB01	C14
12	CAP 0402 / 8 pF / 50 V / C0G / ±0.1 pF	GJM1555C1H8R0BB01	C13
13	CAP 0402 / 10 pF / 50 V / NPO / ±5%	0402N100J500LT	C7, C8
14	CAP 0402 / 0.1 µF / 6.3 V / X7R / ±10%	0402B104K100CT	C3, C4
15	CAP 0402 / 1 µF / 6.3 V / X5R / ±10% / HF	GRM155R60J105KE19D	C1
16	CAP 0603 / 10 µF / 6.3 V / X5R / ±20%	C1608X5R0J106M	C2
17	RES 0402 / 0R / ±5%	WR04X000 PTL	R1, R2, R3, R4, R5, R6, R7, R8, R9, R10, R11, R12, R13, R14, R15, R16, R17, R18, R19, R21, R22, R23, R24, R25, R26, R27, R28, R29, R30, R31, R32
18	RES 0402 / 10K / ±5%	WR04X103 JTL	R20

Copyright © 2013–2015, Texas Instruments Incorporated

7 Layout Guidelines

7.1 Board Layout

Figure 14 shows the WL1835MODCOM8B 4-layer board. Table 3, Figure 15, Figure 16, Figure 17, Figure 18, and Figure 19 show instances of good layout practices.

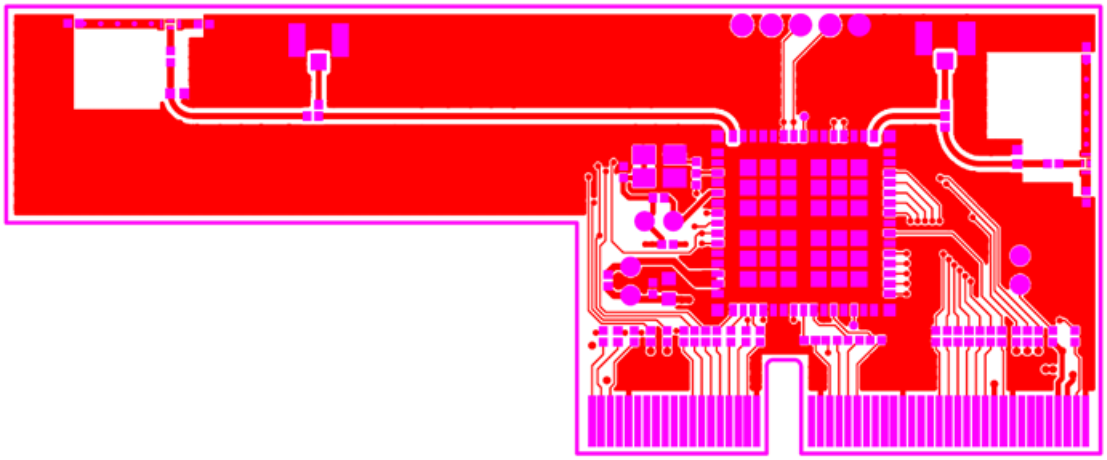

Figure 14. Layer 1

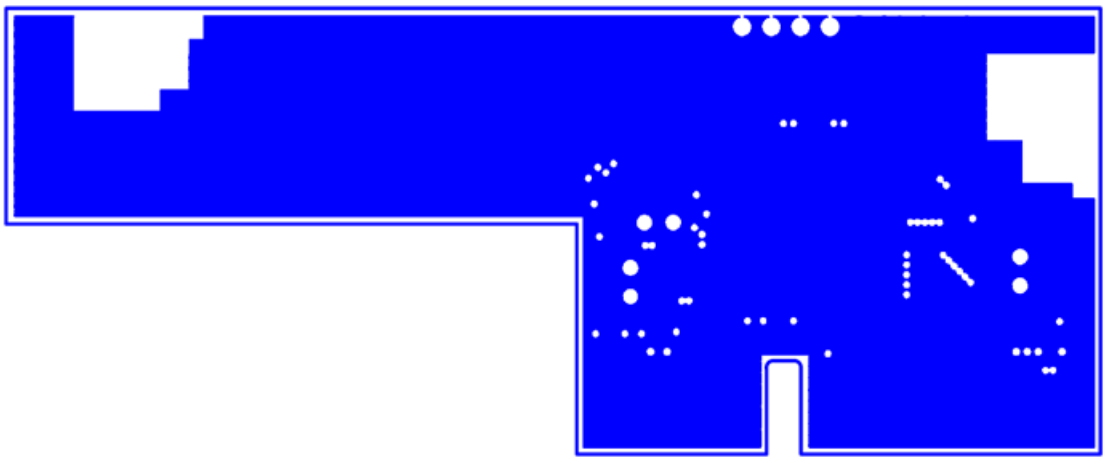

Figure 15. Layer 2

Copyright © 2013–2015, Texas Instruments Incorporated

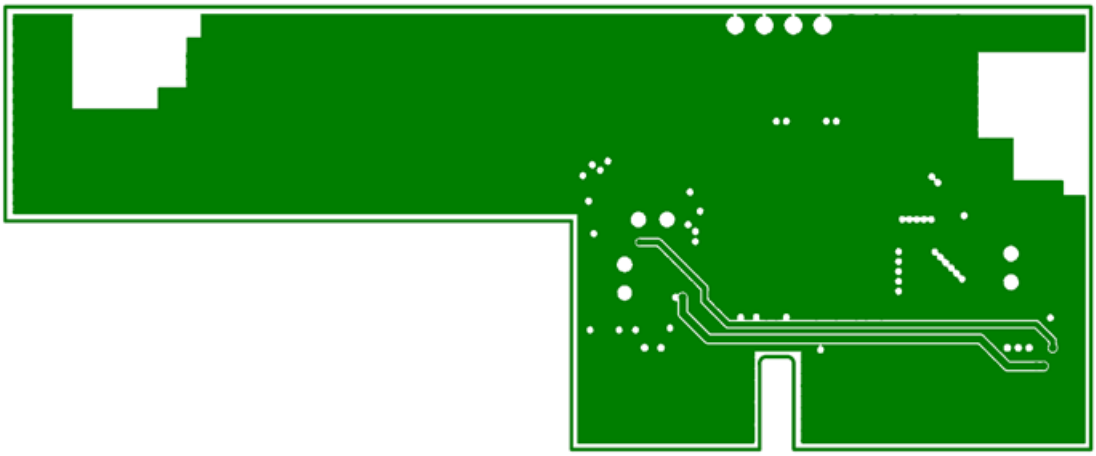

Figure 16. Layer 3

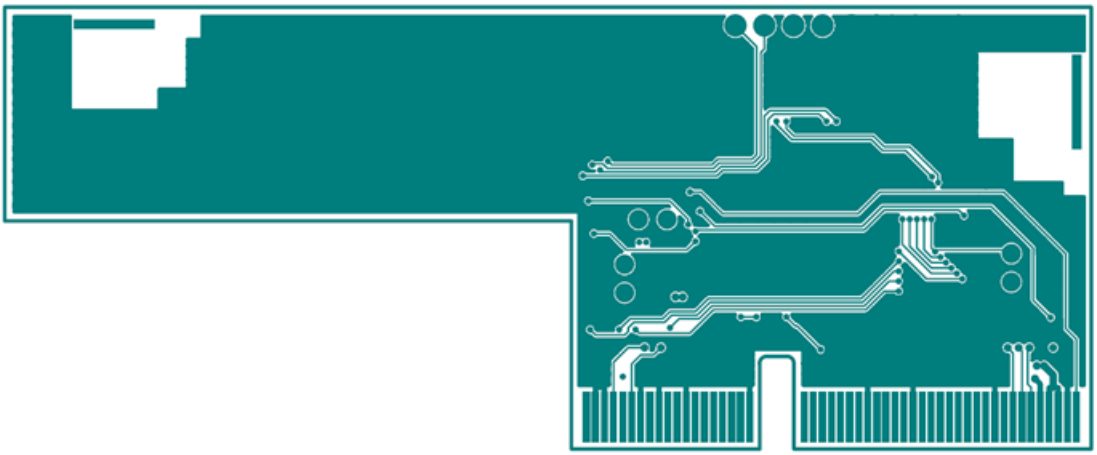

Figure 17. Layer 4

Table 3. Module Layout Guidelines

Reference	Guideline Description
1	The proximity of ground vias must be close to the pad.
2	Signal traces must not be run underneath the module on the layer where the module is mounted.
3	Have a complete ground pour in layer 2 for thermal dissipation.
4	Have a solid ground plane and ground vias under the module for stable system and thermal dissipation.
5	Increase the ground pour in the first layer and have all of the traces from the first layer on the inner layers, if possible.
6	Signal traces can be run on a third layer under the solid ground layer, which is below the module mounting layer.

Copyright © 2013–2015, Texas Instruments Incorporated

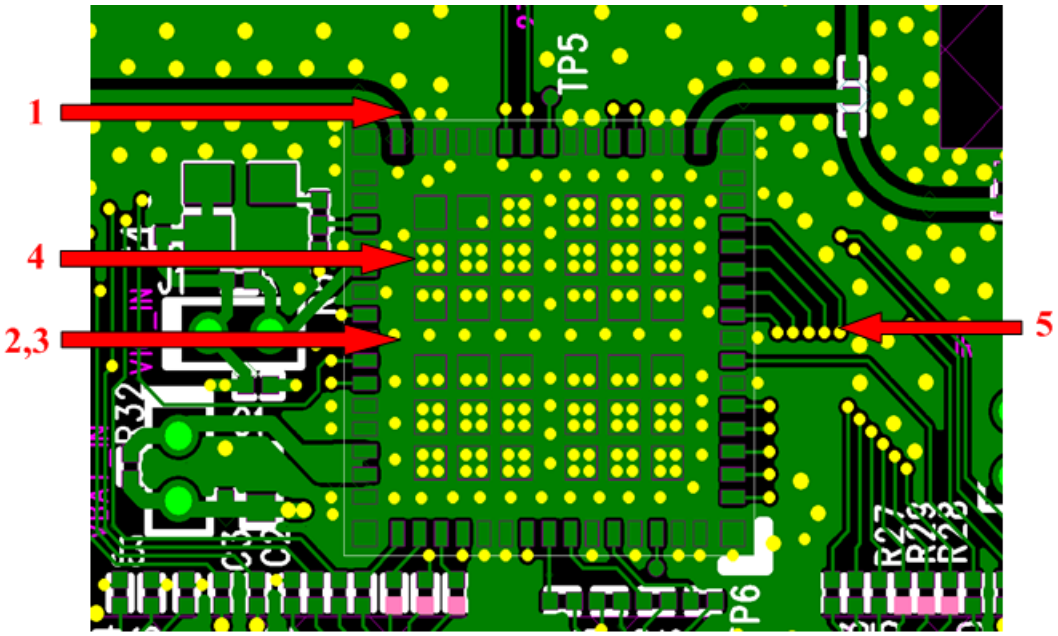

Figure 18. Module Layout Guidelines (Top Layer)

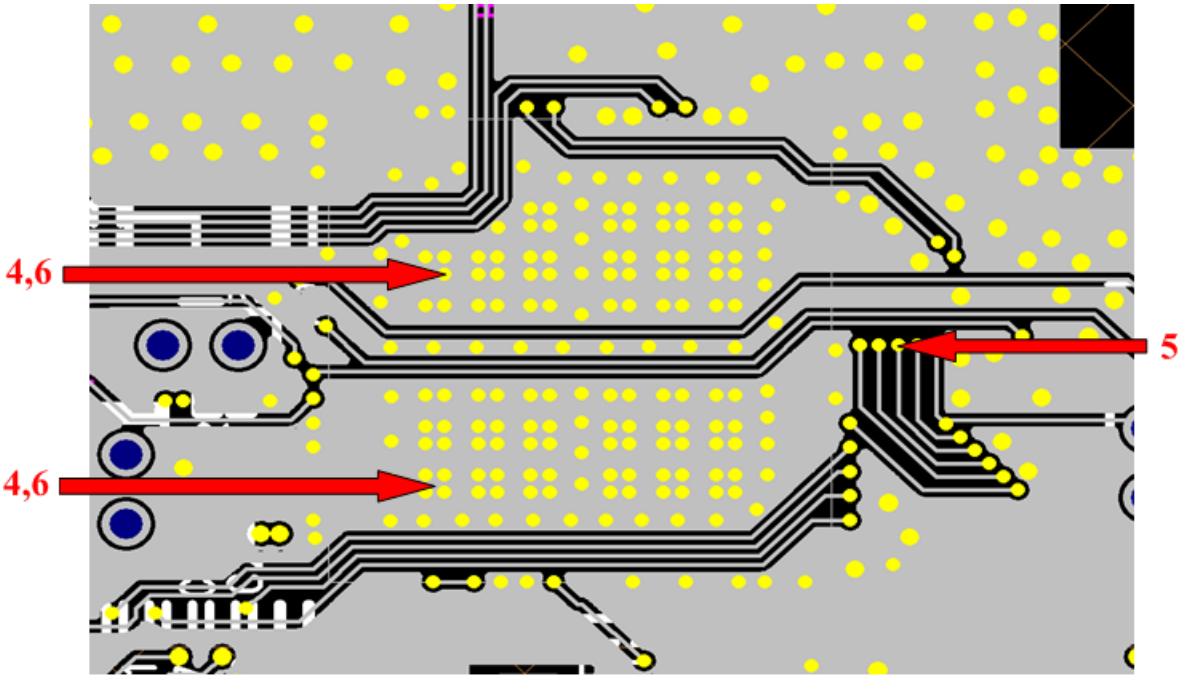

Figure 19. Module Layout Guidelines (Bottom Layer)

Figure 20 shows the trace design for the PCB. A 50-Ω impedance match on the trace to the antenna should be used. Also, 50-Ω traces are recommended for the PCB layout.

Copyright © 2013–2015, Texas Instruments Incorporated

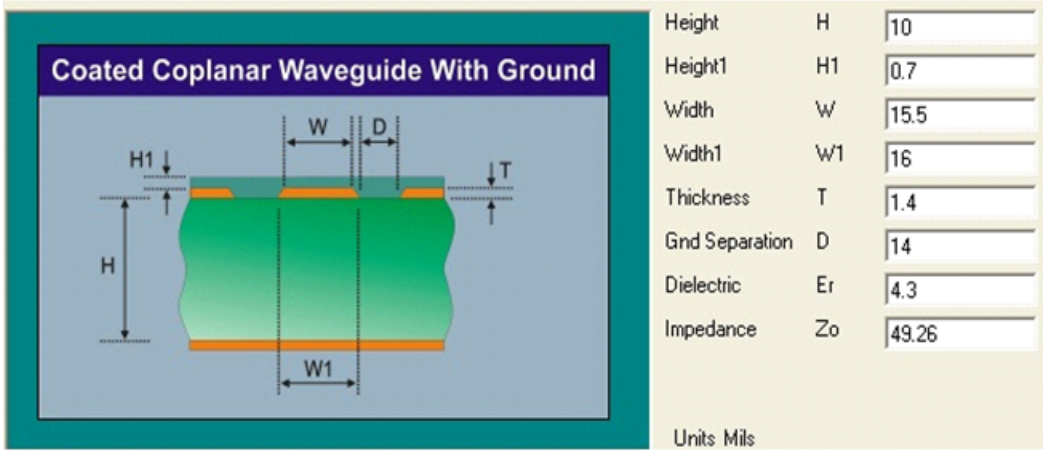

Figure 20. Trace Design for the PCB Layout

Figure 21 shows layer 1 with the trace to the antenna over ground layer 2.

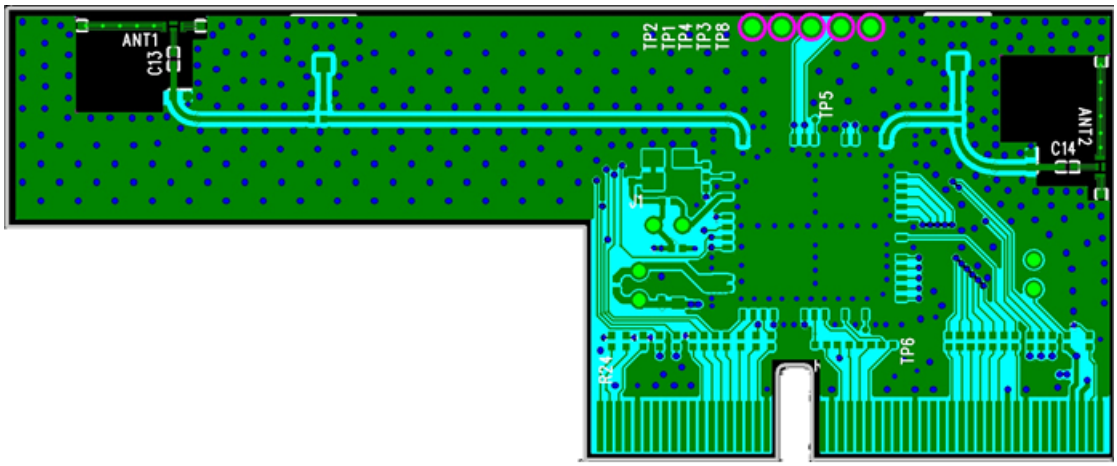

Figure 21. Layer 1 Combined With Layer 2

Table 4, Figure 22, and Figure 23 describe instances of good layout practices for the antenna and RF trace routing.

Table 4. Antenna and RF Trace Routing Layout Guidelines

Reference	Guideline Description
1	The RF trace antenna feed must be as short as possible beyond the ground reference. At this point, the trace starts to radiate.
2	The RF trace bends must be gradual with an approximate maximum bend of 45 degrees with trace mitered. RF traces must not have sharp corners.
3	RF traces must have via stitching on the ground plane beside the RF trace on both sides
4	RF traces must have constant impedance (microstrip transmission line).
5	For best results, the RF trace ground layer must be the ground layer immediately below the RF trace. The ground layer must be solid.
6	There must be no traces or ground under the antenna section.
7	RF traces must be as short as possible. The antenna, RF traces, and modules must be on the edge of the PCB product. The proximity of the antenna to the enclosure and the enclosure material must also be considered.

Copyright © 2013–2015, Texas Instruments Incorporated

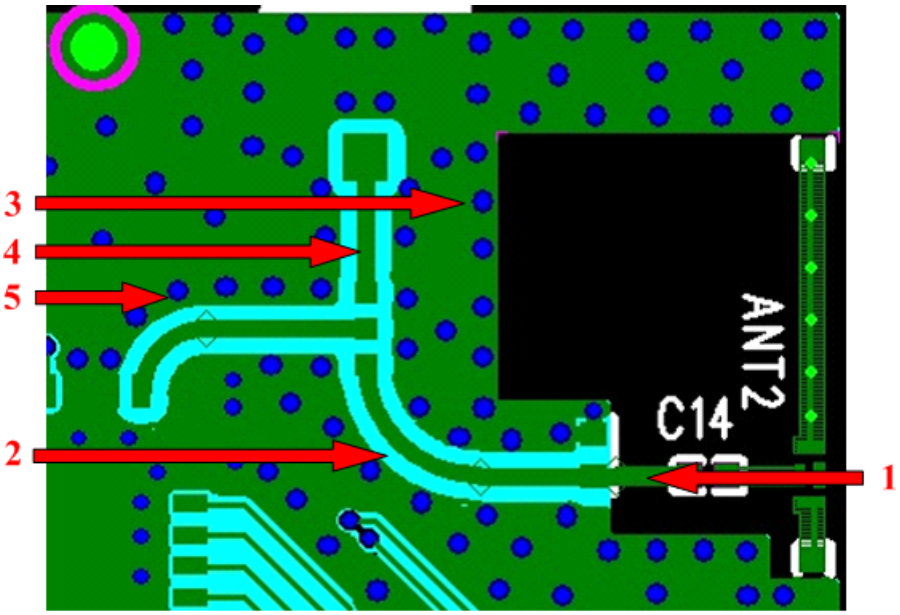

Figure 22. Top Layer – Antenna and RF Trace Routing Layout Guidelines

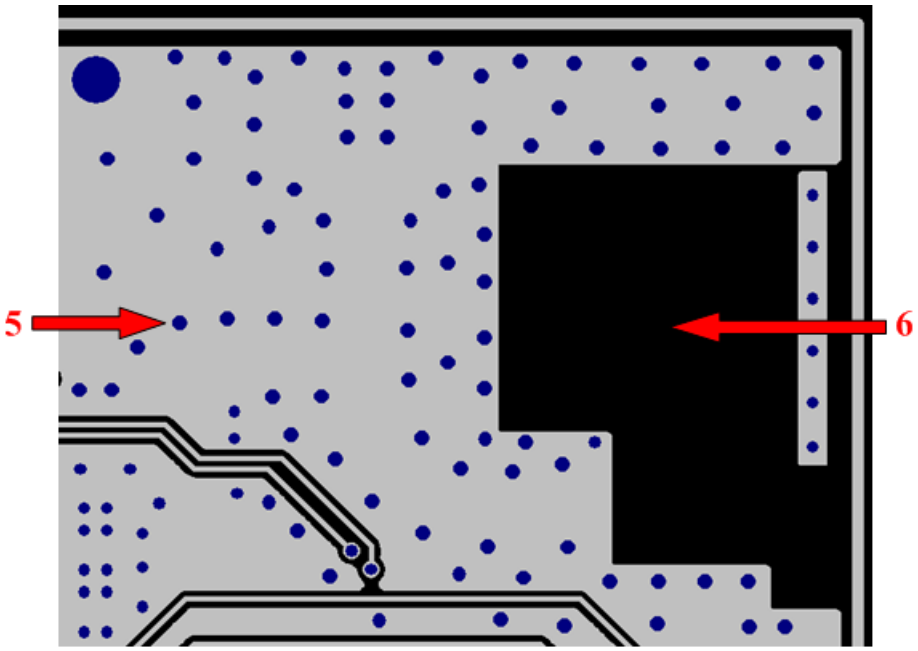

Figure 23. Bottom Layer – Antenna and RF Trace Routing Layout Guidelines

Copyright © 2013–2015, Texas Instruments Incorporated

Figure 24 describes the MIMO antenna spacing. The distance of ANT1 and ANT2 must be greater than half of wavelength (62.5 mm at 2.4 GHz).

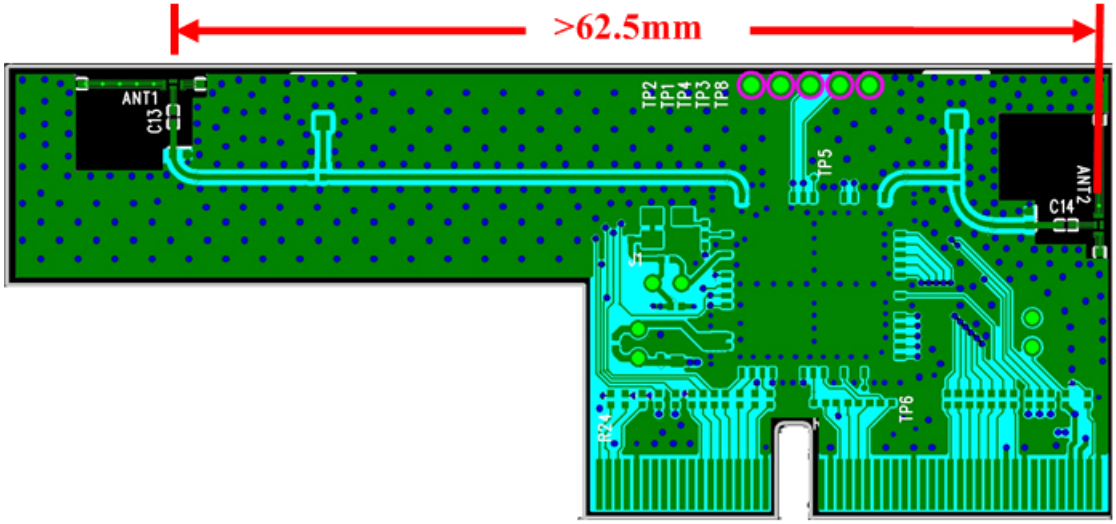

Figure 24. MIMO Antenna Spacing

The supply routing guidelines are as follows:

- For power supply routing, the power trace for VBAT must be at least 40-mil wide.
- The 1.8-V trace must be at least 18-mil wide.
- Make VBAT traces as wide as possible to ensure reduced inductance and trace resistance.
- If possible, shield VBAT traces with ground above, below, and beside the traces.

The digital-signal routing guidelines are as follows:

- Route SDIO signal traces (CLK, CMD, D0, D1, D2, and D3) in parallel to each other and as short as possible (less than 12 cm). In addition, each trace must be the same length. Ensure enough space between traces (greater than 1.5 times the trace width or ground) to ensure signal quality, especially for the SDIO_CLK trace. Remember to keep these traces away from the other digital or analog signal traces. TI recommends adding ground shielding around these buses.
- Digital clock signals (SDIO clock, PCM clock, and so on) are a source of noise. Keep the traces of these signals as short as possible. Whenever possible, maintain a clearance around these signals.

Copyright © 2013–2015, Texas Instruments Incorporated

Revision History

Changes from C Revision (March 2015) to E Revision	Page
• Changed from –40°	2
• Added "Approved Antenna Types and Maximum Gain Values" section from SWRU382A.	9
• Changed section title from "Antenna Characteristics".	10
• Replaced digital-signal routing guidelines.	22

NOTE: Page numbers for previous revisions may differ from page numbers in the current version.

Copyright © 2013–2015, Texas Instruments Incorporated

IMPORTANT NOTICE

Texas Instruments Incorporated and its subsidiaries (TI) reserve the right to make corrections, enhancements, improvements and other changes to its semiconductor products and services per JESD46, latest issue, and to discontinue any product or service per JESD48, latest issue. Buyers should obtain the latest relevant information before placing orders and should verify that such information is current and complete. All semiconductor products (also referred to herein as “components”) are sold subject to TI’s terms and conditions of sale supplied at the time of order acknowledgment.

TI warrants performance of its components to the specifications applicable at the time of sale, in accordance with the warranty in TI’s terms and conditions of sale of semiconductor products. Testing and other quality control techniques are used to the extent TI deems necessary to support this warranty. Except where mandated by applicable law, testing of all parameters of each component is not necessarily performed.

TI assumes no liability for applications assistance or the design of Buyers’ products. Buyers are responsible for their products and applications using TI components. To minimize the risks associated with Buyers’ products and applications, Buyers should provide adequate design and operating safeguards.

TI does not warrant or represent that any license, either express or implied, is granted under any patent right, copyright, mask work right, or other intellectual property right relating to any combination, machine, or process in which TI components or services are used. Information published by TI regarding third-party products or services does not constitute a license to use such products or services or a warranty or endorsement thereof. Use of such information may require a license from a third party under the patents or other intellectual property of the third party, or a license from TI under the patents or other intellectual property of TI.

Reproduction of significant portions of TI information in TI data books or data sheets is permissible only if reproduction is without alteration and is accompanied by all associated warranties, conditions, limitations, and notices. TI is not responsible or liable for such altered documentation. Information of third parties may be subject to additional restrictions.

Resale of TI components or services with statements different from or beyond the parameters stated by TI for that component or service voids all express and any implied warranties for the associated TI component or service and is an unfair and deceptive business practice. TI is not responsible or liable for any such statements.

Buyer acknowledges and agrees that it is solely responsible for compliance with all legal, regulatory and safety-related requirements concerning its products, and any use of TI components in its applications, notwithstanding any applications-related information or support that may be provided by TI. Buyer represents and agrees that it has all the necessary expertise to create and implement safeguards which anticipate dangerous consequences of failures, monitor failures and their consequences, lessen the likelihood of failures that might cause harm and take appropriate remedial actions. Buyer will fully indemnify TI and its representatives against any damages arising out of the use of any TI components in safety-critical applications.

In some cases, TI components may be promoted specifically to facilitate safety-related applications. With such components, TI’s goal is to help enable customers to design and create their own end-product solutions that meet applicable functional safety standards and requirements. Nonetheless, such components are subject to these terms.

No TI components are authorized for use in FDA Class III (or similar life-critical medical equipment) unless authorized officers of the parties have executed a special agreement specifically governing such use.

Only those TI components which TI has specifically designated as military grade or “enhanced plastic” are designed and intended for use in military/aerospace applications or environments. Buyer acknowledges and agrees that any military or aerospace use of TI components which have ***not*** been so designated is solely at the Buyer's risk, and that Buyer is solely responsible for compliance with all legal and regulatory requirements in connection with such use.

TI has specifically designated certain components as meeting ISO/TS16949 requirements, mainly for automotive use. In any case of use of non-designated products, TI will not be responsible for any failure to meet ISO/TS16949.

Products		**Applications**	
Audio	www.ti.com/audio	Automotive and Transportation	www.ti.com/automotive
Amplifiers	amplifier.ti.com	Communications and Telecom	www.ti.com/communications
Data Converters	dataconverter.ti.com	Computers and Peripherals	www.ti.com/computers
DLP® Products	www.dlp.com	Consumer Electronics	www.ti.com/consumer-apps
DSP	dsp.ti.com	Energy and Lighting	www.ti.com/energy
Clocks and Timers	www.ti.com/clocks	Industrial	www.ti.com/industrial
Interface	interface.ti.com	Medical	www.ti.com/medical
Logic	logic.ti.com	Security	www.ti.com/security
Power Mgmt	power.ti.com	Space, Avionics and Defense	www.ti.com/space-avionics-defense
Microcontrollers	microcontroller.ti.com	Video and Imaging	www.ti.com/video
RFID	www.ti-rfid.com		
OMAP Applications Processors	www.ti.com/omap	**TI E2E Community**	e2e.ti.com
Wireless Connectivity	www.ti.com/wirelessconnectivity		

Mailing Address: Texas Instruments, Post Office Box 655303, Dallas, Texas 75265
Copyright © 2015, Texas Instruments Incorporated